Reservdelslista / Reservedelslista / Reservedelsliste / Varaosalista / Spare parts list

LODAL

ART.NR:

- 96730
- 96731
- 96732

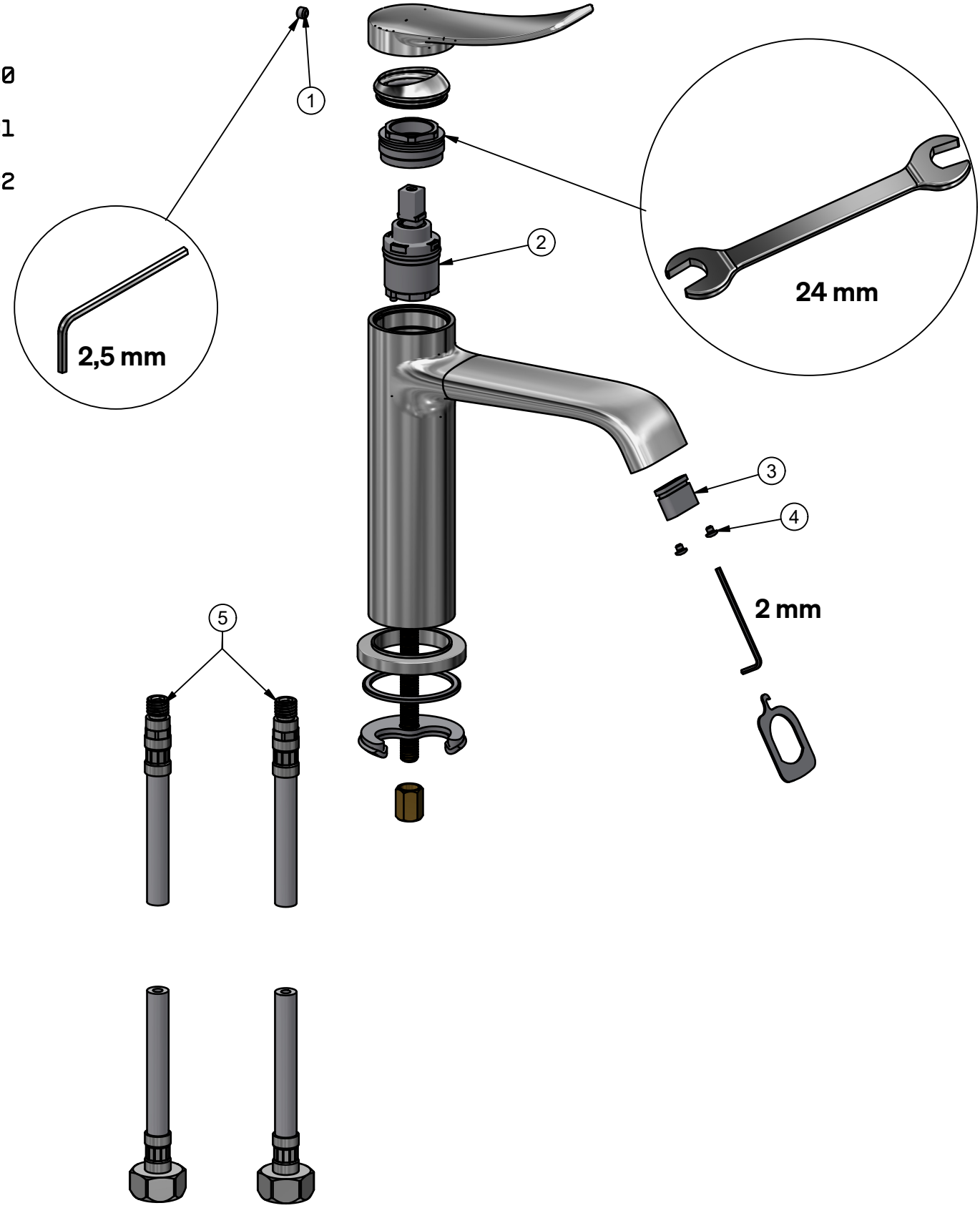

Pos.	Ant. / Qty.	Titel / Title	Art.nr. Krom / Chrome:	Art.nr. Svart / Black:	Art.nr.Blyertssvart / Pencil black:
1	1	Insexskruv M5x4 / Inox screw M5x4			
2	1	Keramisk insats kallstart / Ceramic cartridge with cold start	95055	95055	95055
3	1	Perlator 5L / Aerator 5L	95054	95054	95054
4	2	Perlator skruv / Aerator screw			
5	1	Anslutningsslang par / Connection hose pair (SoftPex 3/8" L=450mm)	99222	99222	99222

Rev.no 2025-07-03